DUALTRON

VICTOR LIMITED

Personal Mobility

PRODUCT MANUAL

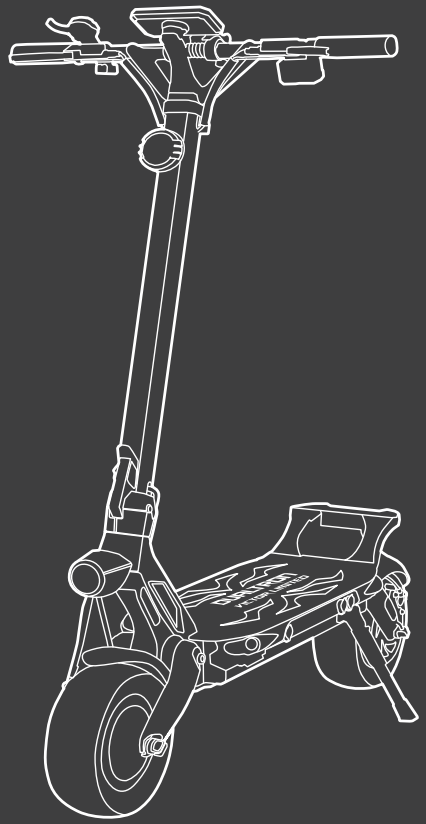

RECICLA
RECYCLE

Scan the QR code to download the latest user materials
and obtain the latest updates and safety instructions.

DUALTRON

The dream of electric technology.

The pictures shown are for illustration purposes only. Actual product may vary.

DUALTRON

MINIMOTORS

Diagram And Functions

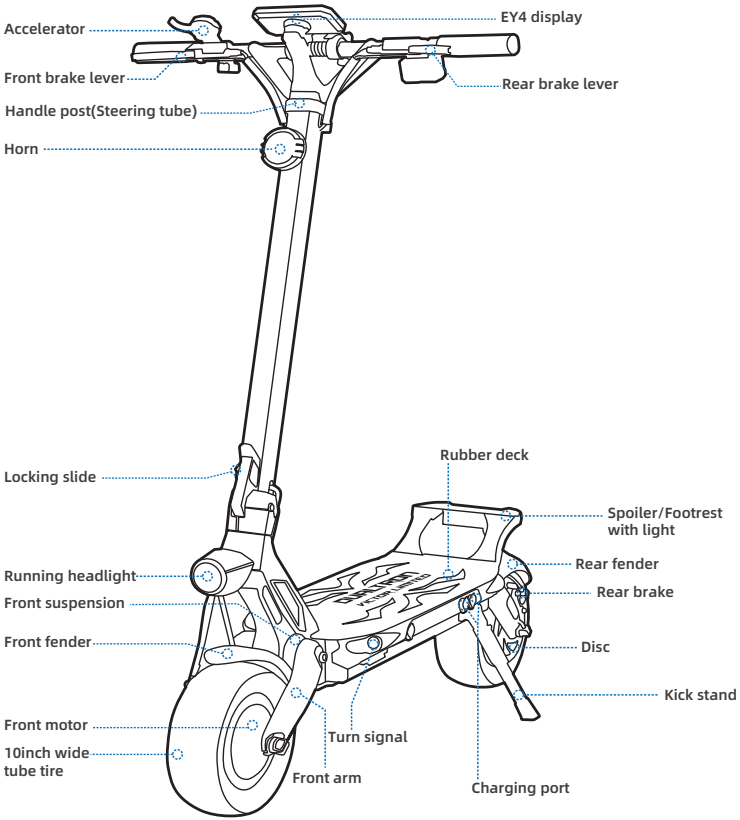

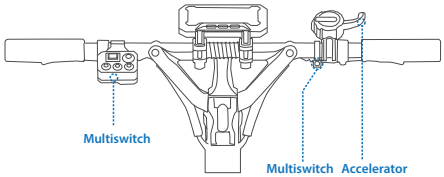

Name	Function	Operation method
Turn Signal Button	Turn on/off the left/right signal	Press the left/right side of the Turn Signal Button, the left/right turn signal will keep blinking.
ON/OFF Headlight Button	Turn on/off the headlight	Press the Headlight Button, the headlight is on;Press it again,the headlight is off.
Horn Button	Turn on the horn	Press the Horn Button, the scooter will beep once.
Ambient Light Button	Turn on/off ambient light	Press the Ambient Light Button, turn on/off both sides of ambient light.
Warning Light Button	Turn on the warning light	Press the Warning Light Button,the left&right signals will keep blinking until press the Warning Light Button again.
SINGLE DUAL Motor system selection button	Enable SINGLE/DUAL drive mode	Switch modes through pressing the button.
Accelerator	Speed up	Pull the throttle to accelerate.

Specifications

	Item	Parameter
Product	Model	Dualtron Victor limited
Battery	Battery Capacity	60V31.5Ah CN / 60V35Ah Samsung
	Range	94km / 110km
	Charging Ambient Temperature	0 to 40°C (Battery temperature exceeds 55°C,BMS start protection program.)
	Battery Management System	Over-heating, short circuit, over-current, over-discharge and over-charge protection
Rider	Max. load	120kg
	Recommended Age	16-60 years old
	Required Height	3'11" -6'6" (120-200 cm)
Display	Type	EY4 LCD Bluetooth Display(Ability to connect to DUALTRON APP)
Motor	Motor Type	BLDC Hub Motor
	Nominal Power	1300w*2
Machine	Net Weight	39.1kg
	Max. Slope	Around 70% (35°)
	Drive System	Single/ Dual drive
	Speed	25km/h
	Length × Width × Height	1230x600x1300mm
	Folded: Length × Width × Height	1230x260x560mm
	Wheelbase	Approx.970mm
	Ground Clearance	Approx.140mm
	Traversable Terrain	Asphalt/flat pavement; obstacles < 5 cm; gaps < 5 cm
	Operating Temperature	-5 to 45°C
	Storage Temperature	-20 to 50°C

Specifications

Brake	Machine Brake	Nutt Hydraulic Brake
	Electric Brake	ABS&EBS (Indicating the battery temperature exceeds 55°C,BMS start protection program,ABS/EBS fails.)
Charger	Input Voltage	100-120V/200-240V~
	Max. Output Voltage	66.4V 1.7A
Tire	Type	10x3.0-6.5 tubeless tire
	Tire Pressure	50 psi
	Material	Rubber
Suspension	Type	F&R suspension cartridge（replaceable）
	Optional	（Default） Softest Medium soft Medium Medium hard Hardest

*Disclaimer: this is not a legal opinion or legal advice. The information provided herein (including in the App) is for your convenience and information purpose only. It is not intended to cover every piece of law and/or regulation that may be applicable to this product. DUALTRON explicitly hereby disclaims any and all warranty and/or representation, express or implied, related to completeness, accuracy, up-to-date of such information. DUALTRON reserves the right but not obligation to correct, implement and/or update the information. You shall use the information at your own risk. It is your sole responsibility to learn and understand any and all the law and/or regulation, requirements, prohibition, restriction and/or limitation imposed by either law, government authority, court, private party or the others that may apply to your use of this product.

*Theoretical Range: tested while riding with a full battery, 75 kg load, 25°C, at the speed of 25 km/h on average on pavement.
*Typical Range: tested while riding with a full battery, 75 kg load, 25°C, at the speed of 50 km/h on average on pavement. (Some of the factors that affect range include speed, number of starts and stops, ambient temperature, etc.)
*Max.Speed: tested while riding with a full battery,75kg load,25°C,straight road on flat road with no wind. (Some environmental factors can affect max speed,uneven roads, crooked roads, temperature, wind, etc.)

Packing List

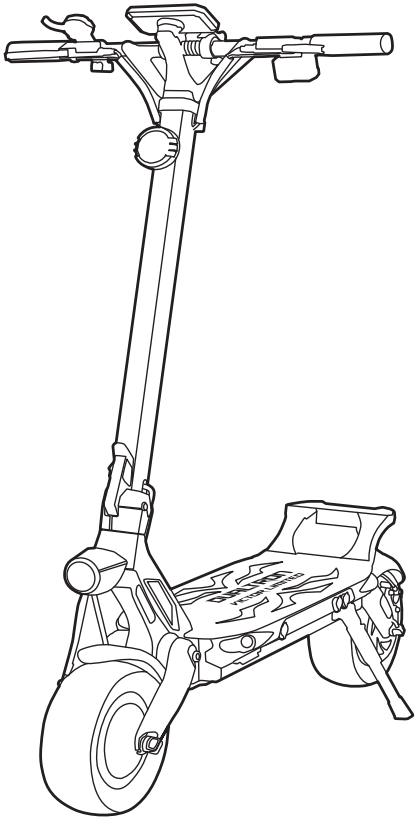

Accessories

Battery charger x1

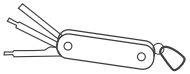

Multitool x 1

Manual

Assembly

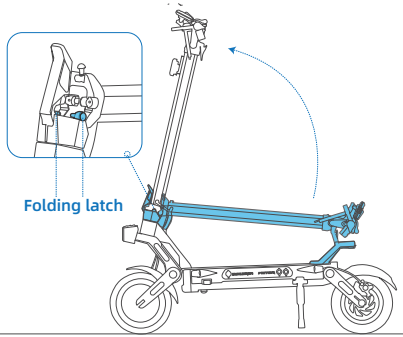

① Raise the steering tube and make sure the folding latch gets into the button correctly.

⚠ (Carefully,if the folding latch gets into the button incorrectly,the steering tube will fall down and be damaged)

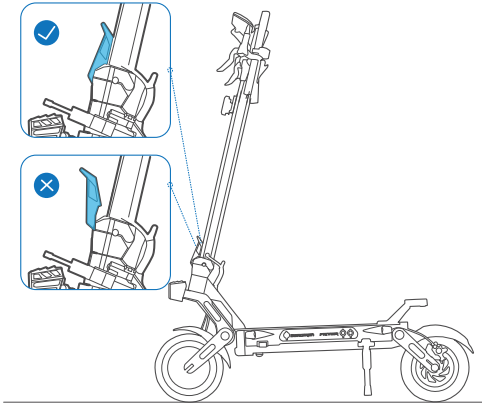

② Press down the quick release lever firmly to make sure the folding mechanism is tightened.

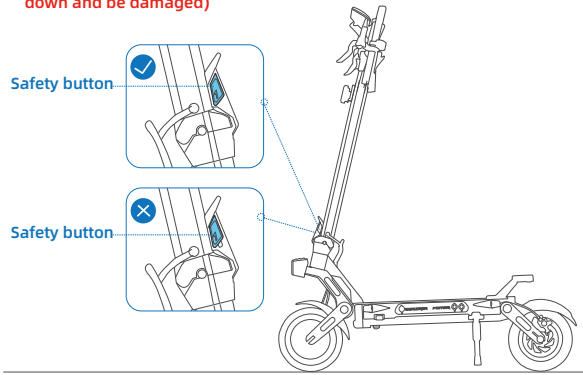

③ Check the status of the safety button and make sure it is back to position.

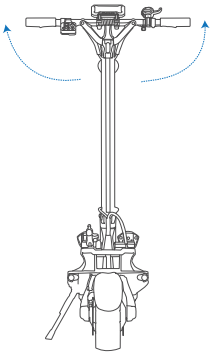

④ Lift the handles, slide the hoops, and fix the handles firmly by quick releases.

Bluetooth Connection

APP Download Guide

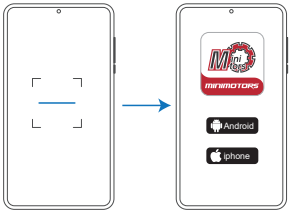

1.Scan the QR code to download the APP.
2.Choose the mobile phone system that suits you to install,and register / log in.

1.Search "DUALTRON" in the application and download it, and register / log in.

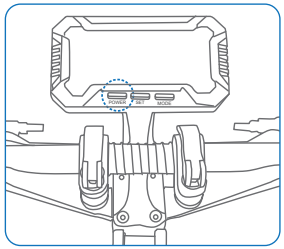

Power on the scooter.

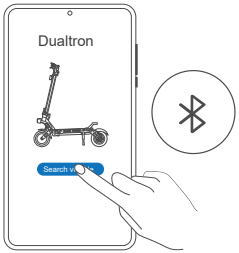

Click “Search vehicle” and pair with your scooter. * The scooter is connected to the Dualtron app when the Bluetooth symbol lights up.

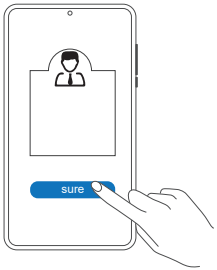

Select “bind as owner".
(No one else can connect, only people authorized by you are allowed to connect. Authorizations are created on the app.)

How to Ride

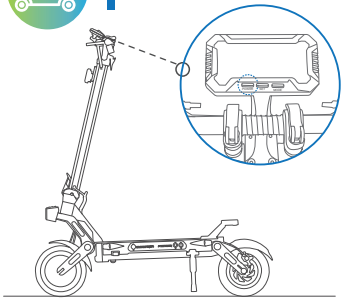

1. Power on the scooter and choose the speed mode. * Please choose the speed mode before riding! Note:Speed mode can be choose via the Dualtron app.

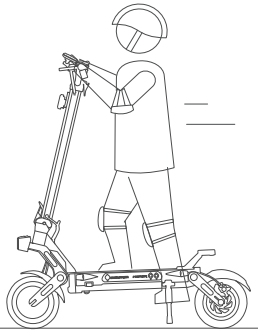

2. Stand on the footboard with one foot and push off with the other foot to start gliding. *Make sure you have disabled SAFE mode.(SAFE mode setting via Dualtron app.Deactivate safe mode by squeezing brake lever.)

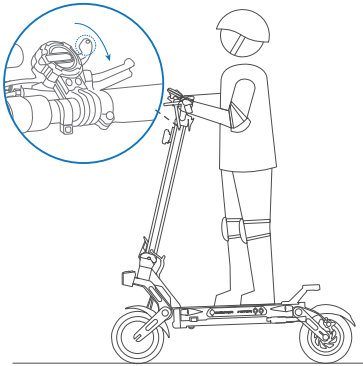

3. Put both feet on the footboard and stand stably. Pull the throttle to speed up.

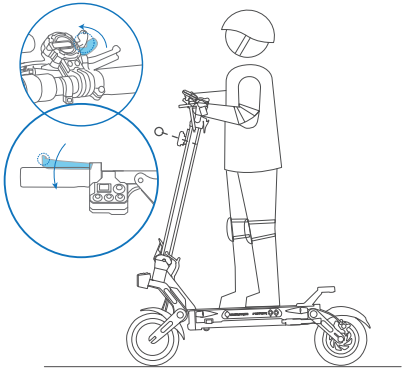

4. Slow down by releasing the throttle and squeezing brake levers.

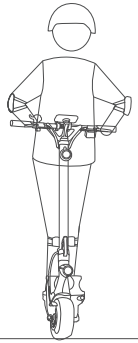

5. To turn, shift your body and turn the handlebar slightly.
* Please watch out for road conditions, sufficient turning space is required.

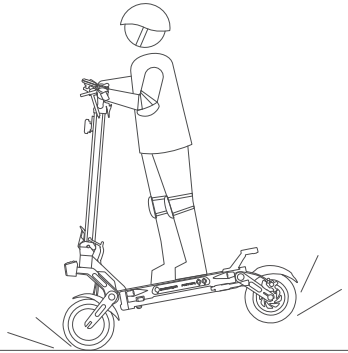

When hard braking, serious danger or injury may occur. Maintain a moderate speed and look out for potential hazards.

Folding

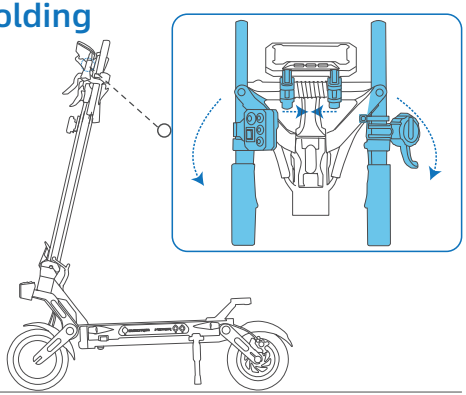

Fold the handlebars,slide the folding handle lock out of position to release handles.

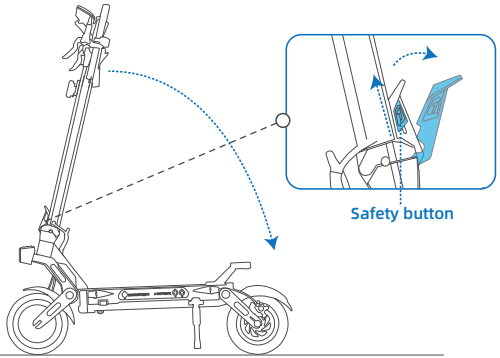

Slide the safety button up and open the quick release lever.

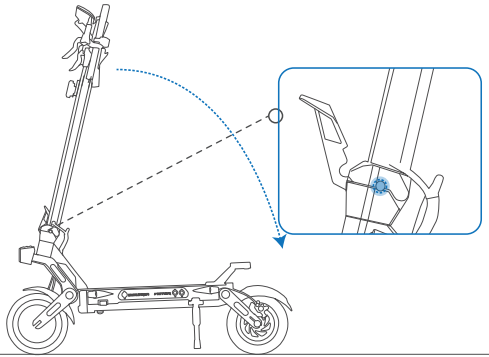

Press the both folding latches, and then fold the steering tube. ⚠ When pressing the safety latch, you must hlod the steering tube with your hand to prevent falling down and hitting.)

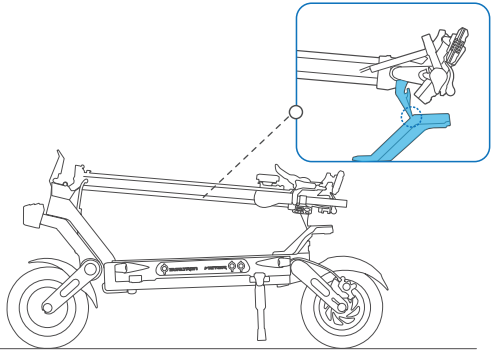

Lock the handlebar hook to the footrest.

⚠ Ensure that lock the handlebar when lift scooter)